FERMATIC - HANDLES for sliding doors

Lever handles external 8730 - internal 8530

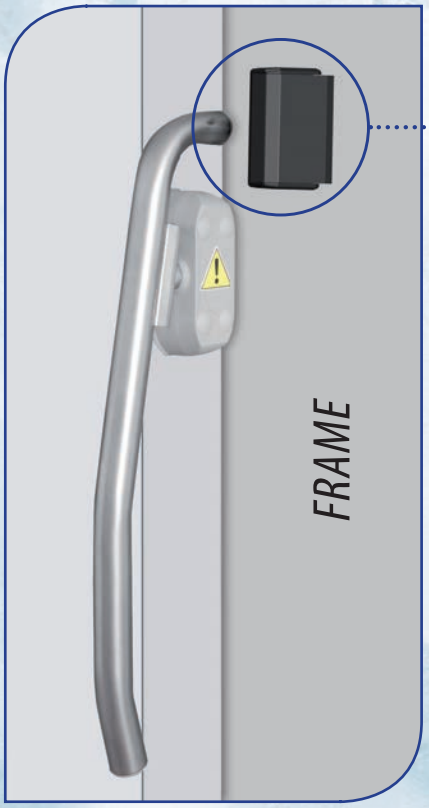

8730 external

! New butt: improved cleanability.

- Minimum door thickness: 50 mm
- Maximum door weight: 120 kg
- Gasket thickness: 35 mm

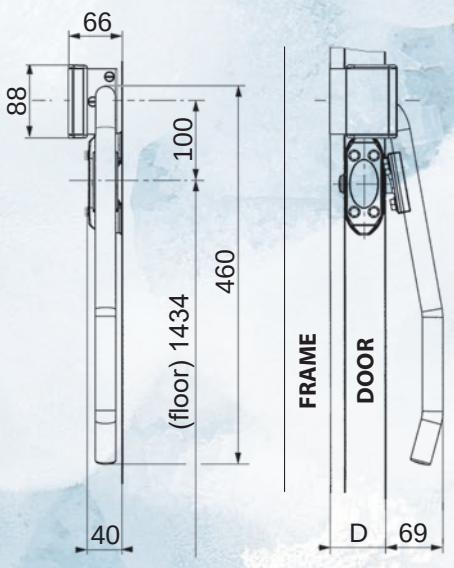

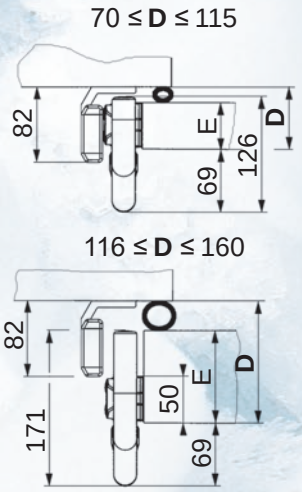

D = door offset
(door thickness (E) + gasket)

Handles reference	D (in mm)	
	mini	maxi
External handle 8730 for door offset 70/115	70	115
External handle 8730 for door offset 116/160	116	160

The lever handles 8730-8530 allow opening and closing of sliding doors up to 120 kg with minimal effort.
They have been designed for minimum door thickness of 50 mm and maximum offset of 160 mm.

8530 internal

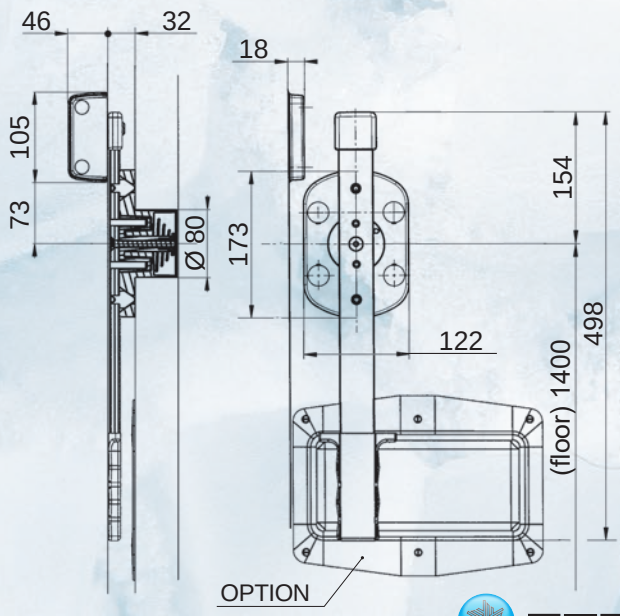

Lever handles external and internal 6200

6200 external

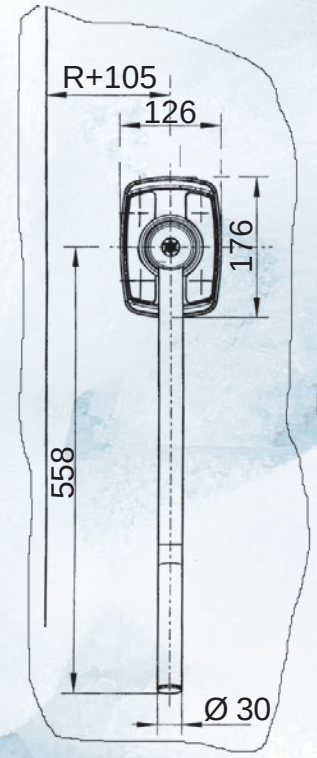

R = Overlapping

- For positive temperature doors
- Door thickness: 60 to 140 mm
- Maximum door weight: 200 kg
- Gasket thickness: 35 mm

The ideal lever handle for positive temperature doors up to 200 kg. Aesthetic and completely rust free, this handle is mainly used in the food processing industry where hygiene is an essential issue.

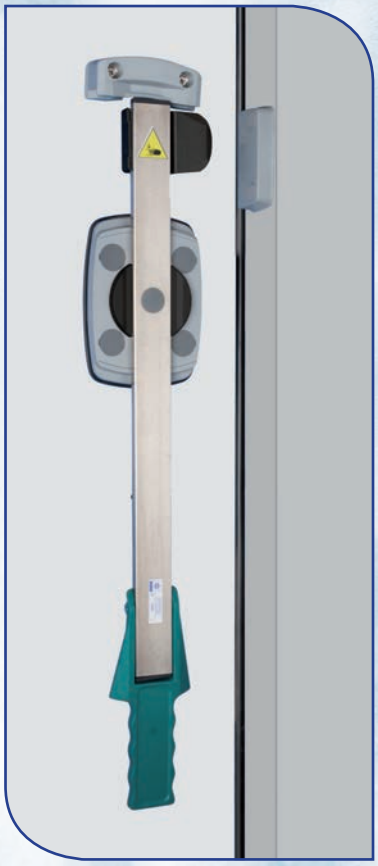

6200 internal

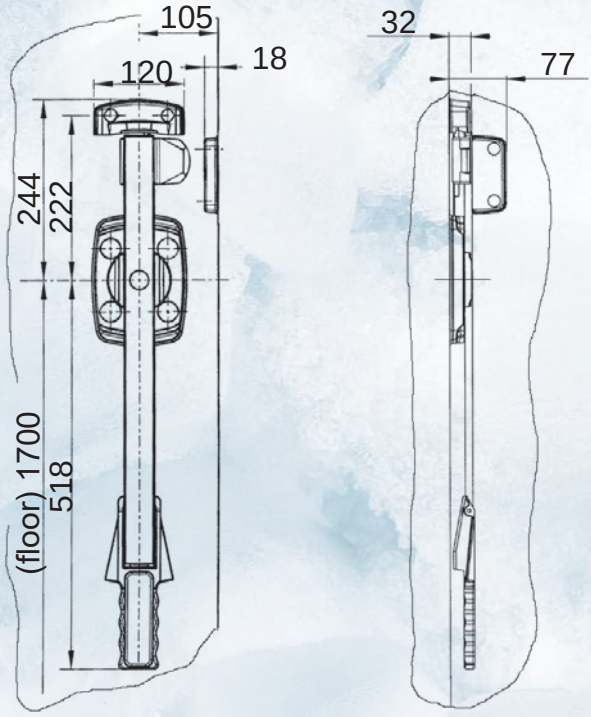

FERMOD

Lever handles external 3530/7530 - internal 7530 for doors up to 200 Kg

Extended lever handles external 7530 - internal 7530 for doors from 200 to 300 Kg

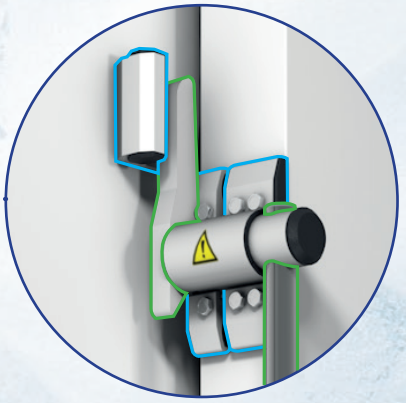

- Door thickness: 80 to 225 mm
- Maximum door weight: 200 kg or 300 kg
- Gasket thickness: 35 mm

! Extended lifting arm and lever : thanks to their wider lever arm, make it easier to open the doors and exit the ramps.

! New clamps and butt : simplified assembly and improved cleanability.

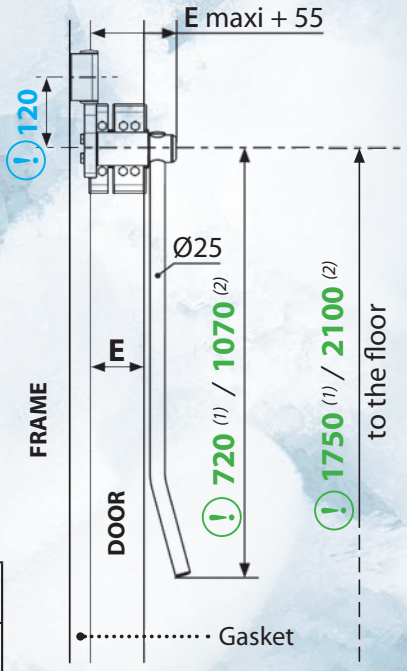

Door thickness (E)				
80/90	91/115	116/160	161/180	181/225

3530 external
7530 external for system with stainless steel rail

For doors up to 200 Kg :
- External lever handle 3530
- External lever handle 7530
- Internal lever handle 7530

For doors from 200 to 300 Kg :
- Extended external lever handle 7530
- Extended internal lever handle 7530

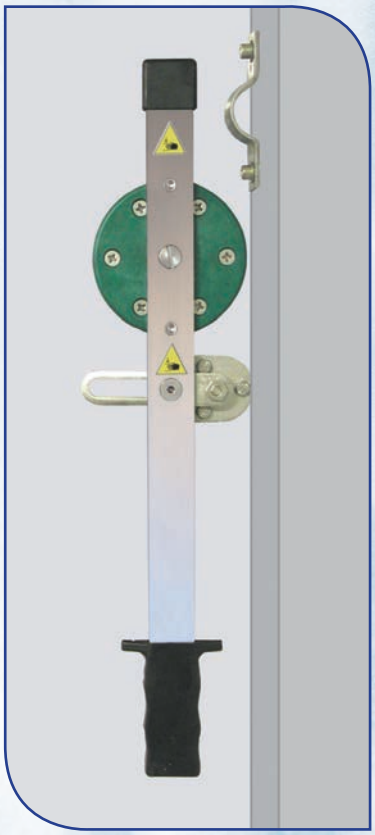

7530 internal

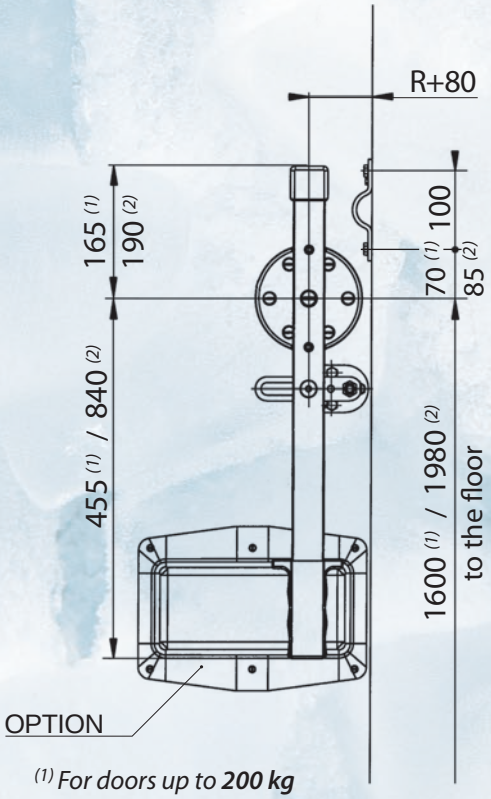

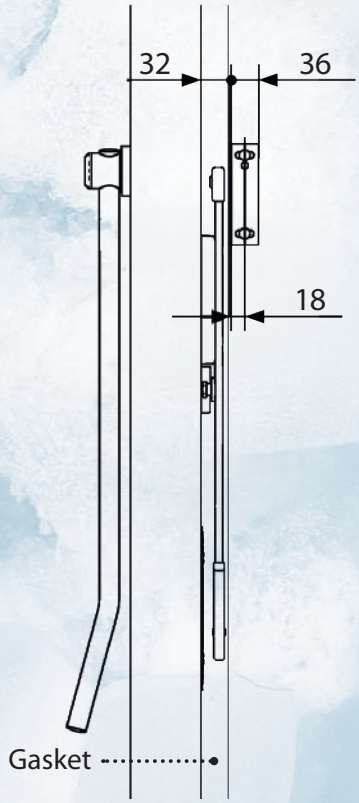

(1) *For doors up to **200 kg***
(2) *For doors from **200** to **300 kg***

FERMOD

Lever handles external and internal 4400

4400 external

- Door thickness: 100 to 160 mm
- Maximum door weight: 400 kg
- Gasket thickness: 35 mm

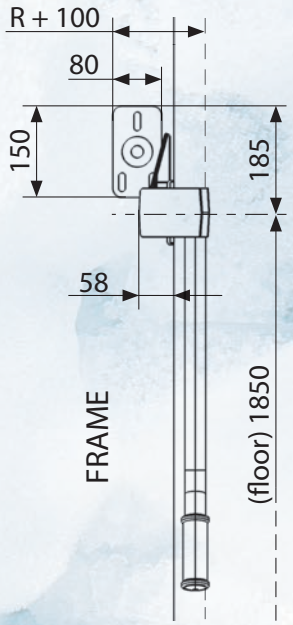

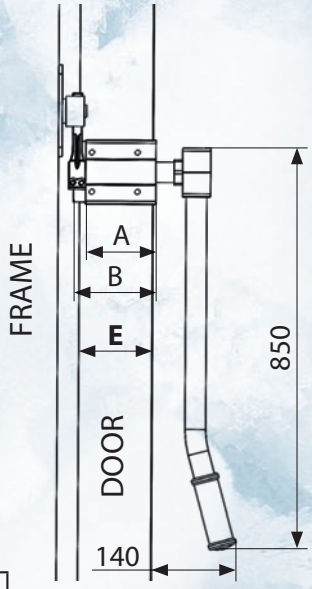

	A	B
100 ≤ **E** ≤ 115	70	115
116 ≤ **E** ≤ 160	90	135

E = Door thickness
R = Overlapping

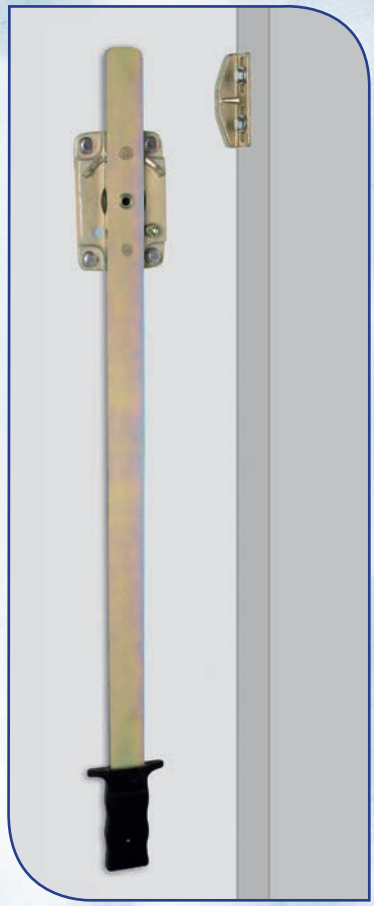

4400 internal

The lever handles 4440 allow opening and closing of sliding doors up to 400 kg. They have been designed for minimum door thickness of 100 mm.

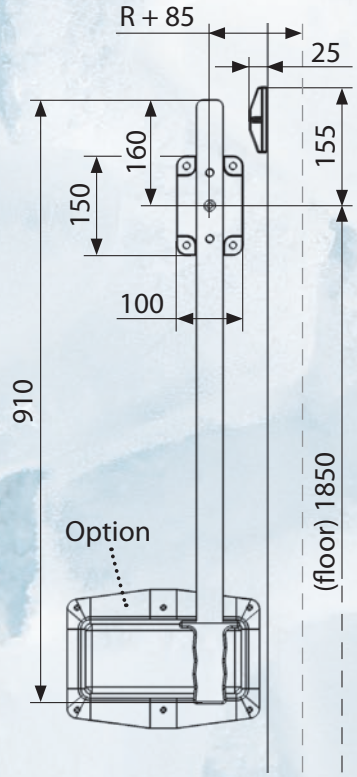

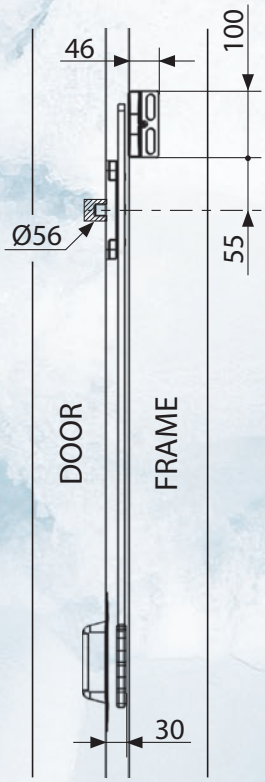

FERMOD

Fixed handles external 2320 - internal 2320

2320 external

- Minimum door thickness: 40 mm
- Maximum door weight: 80 kg

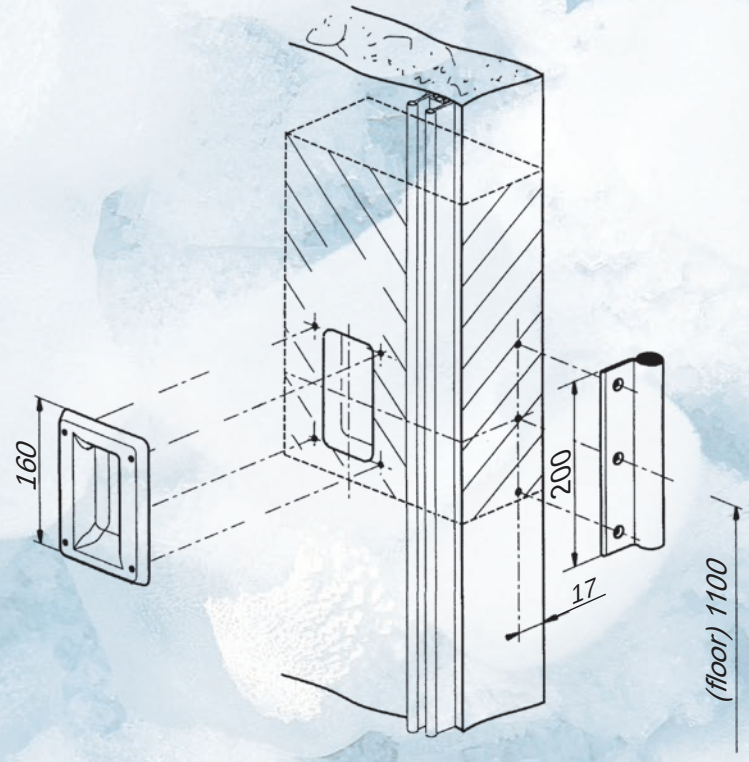

The fixed internal and external handles made of anodised aluminium and composite are ideal for light doors installed in personnel, distribution centers and laboratories.

2320 internal

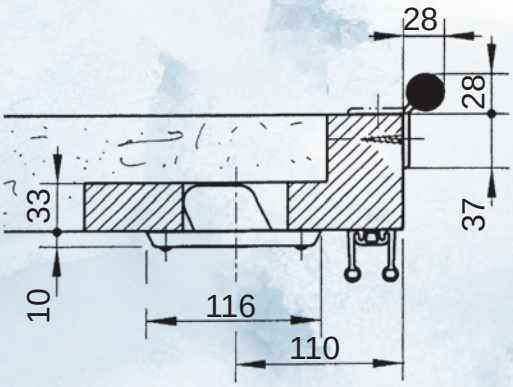

FERMOD®

Fixed handles external 2420 - internal 8520

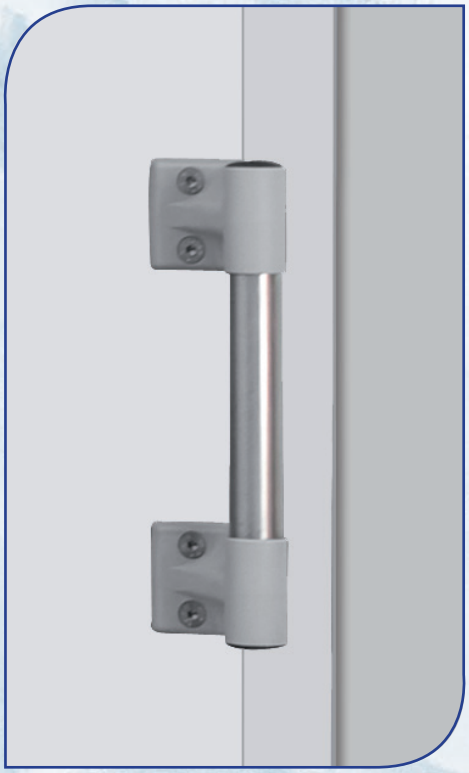

2420 external

- Minimum door thickness: 45 mm
- Maximum door weight: 120 kg

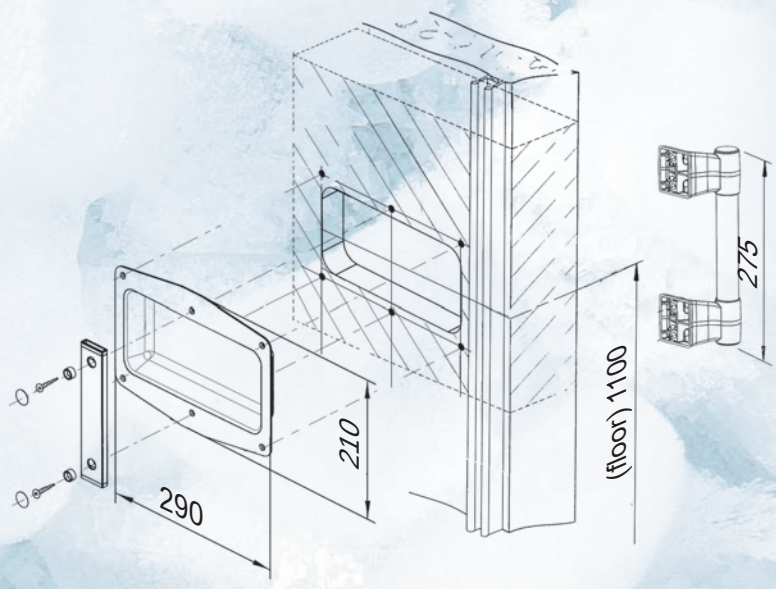

The 2420 and 8520 handles are suitable for doors with maximum weight of 120 kg. Their design allows opening of the doors with minimal effort.
Advice: depending on personnel and the dimensions of the doors, it may be preferable to use a lever handle.

8520 internal

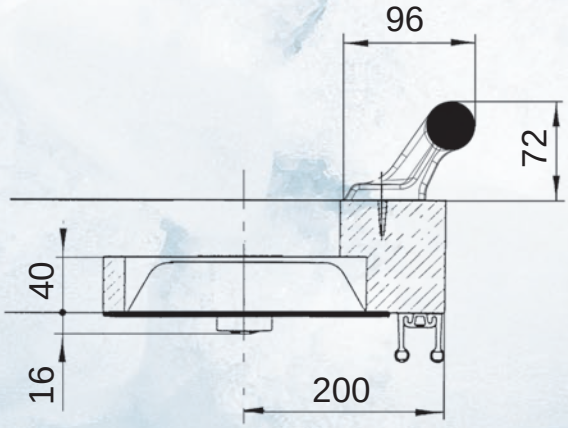

DISTRIBUTOR

Imprimerie Polyservices - Beauvais
Edition 09/2022

FERMOD®
3 avenue Eugène Gazeau - 60300 SENLIS - FRANCE
Tél. : +33 (0)3 44 53 12 86 - Fax : +33 (0)3 44 53 62 03
www.fermod.com • e-mail: contact@fermod.com
Siège Social : Senlis (Oise) - Société Anonyme au Capital de 1 004 400 €
RCS Compiègne B 301 468 211 - Siret 301 468 211 00018 - APE 2572 Z

« In order to improve the quality of our products, FERMOD reserve the right to modify any products without notice.
The characteristics and pictures of the products presented on this documentation are not of any legal value.»